DIAPHRAGM PRESSURE GAUGE
TYPE KP 120/ KPR 120

Diameter:	100 mm
Accuracy:	1,6 % to the full scale value
Execution:	case and bayonet ring out of stainless steel
Measuring system:	copper alloy
Dial:	aluminium white, writing black
Window:	glass
Connection:	G 1/2, 1/2 NPT ...
Connection position:	bottom, backside centric (KPR 120)
Options:	- back flange - further options on request

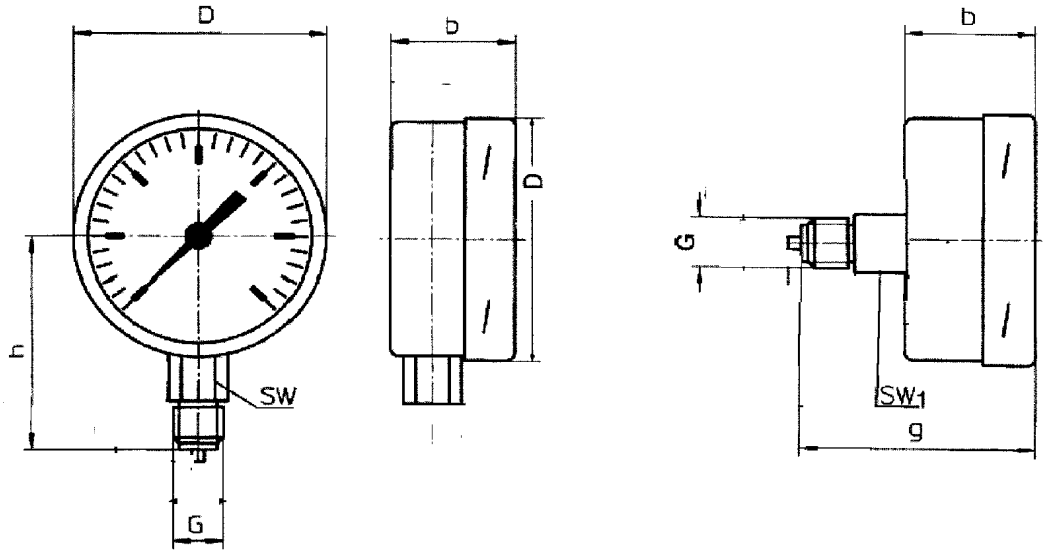

Ng	D	b	h	G	g	SW
100	100	49	83	1/2	94	27

mass in mm

We reserve the right to change technical details.

Manometer Preiss EMPEO-KBM, Friedrich-Gauß-Str. 2, 53757 Sankt Augustin
Tel.: +49 2241-845230-0, Fax: +49 2241-845230-30, Email: info@empeo.de